LI-ION technology

Electric stand-on and sideways-seated stacker

ESD 220

Lift height: 1660 mm / Load capacity: 2000 kg

JUNGHEINRICH

ESD 220

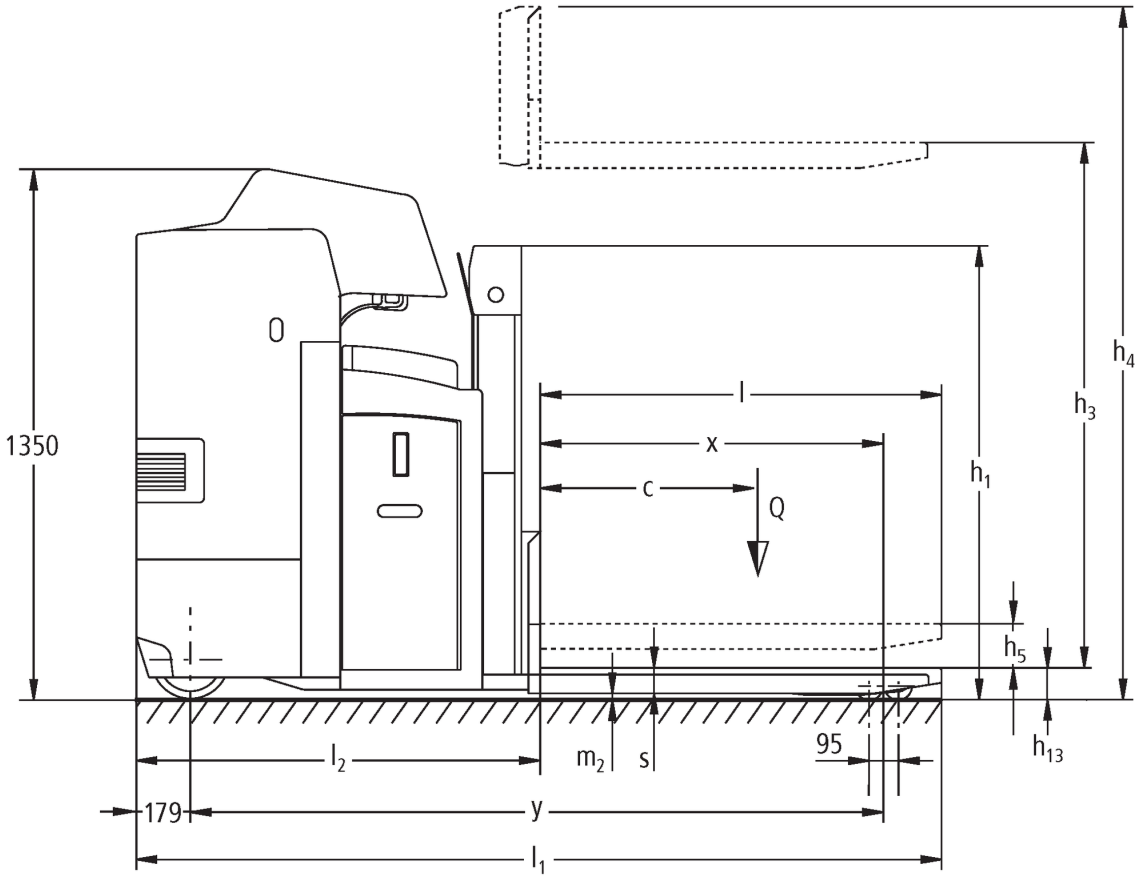

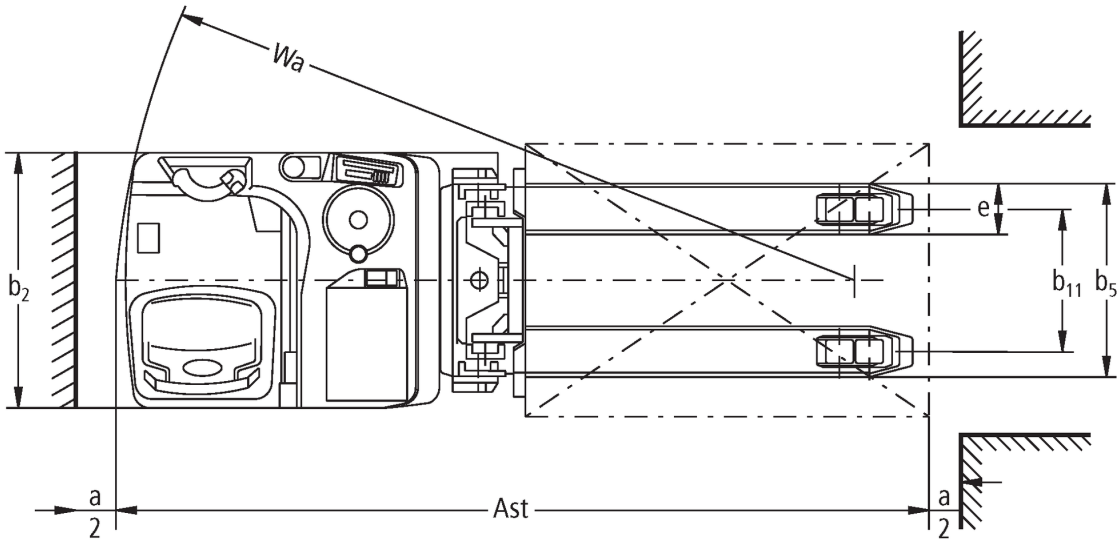

ESD 220

ESD 220	Lift (h3)	Retracted mast height (h1)	Free lift (h2)	Extended mast height (h4)
Zweifach-Hubgerüst ZT	1660 mm	1310 mm	100 mm	2150 mm

VDI table

Stand-on: 08/2022

Characteristic	1.1	Manufacturer (abbreviated description)			Jungheinrich
	1.2	Manufacturer's type designation			**ESD 220**
	1.3	Drive			Elektro
	1.4	Operation			Sitz
	1.5	Load capacity/load	Q	kg	2000
	1.5.1	Rated capacity/load with mast lift	Q	kg	1000
	1.5.2	Rated capacity/load with support arm lift	Q	kg	2000
	1.6	Load centre distance	c	mm	600
	1.8	Load distance, centre of drive axle to fork	x	mm	926
	1.9	Wheelbase	y	mm	1734
Weights	2.1.1	Service weight (incl. battery)		kg	1350
	2.2	Axle load laden front/rear		kg	1340 / 2010
	2.3	Axle load unladen front/rear		kg	982 / 368
Wheels/suspension system	3.1	Tyres			Vulkollan ®
	3.2	Tyre size, front			Ø 230 x 77
	3.3	Tyre size, rear			Ø 85 x 85
	3.4	Additional wheels			Ø 140 x 54
	3.5	Wheels, number front/back (x=driven)			2-1x/4
	3.6	Tread width, front	b_{10}	mm	544
	3.7	Tread width, rear	b_{11}	mm	380
Basic dimensions	4.2	Retracted mast height (h1)	h_1	mm	1310
	4.3	Free lift (h2)	h_2	mm	100
	4.4	Lift (h3)	h_3	mm	1660
	4.5	Extended mast height (h4)	h_4	mm	2150
	4.6	Initial lift	h_5	mm	110
	4.8	Seat height/stand height	h_7	mm	950
	4.15	Height, lowered	h_{13}	mm	90
	4.19	Overall length	l_1	mm	2185
	4.20	Length including fork shank	l_2	mm	995
	4.21.1	Overall width	b_1	mm	820
	4.22	Fork dimensions	s/e/l	mm	65 x 185 x 1190
	4.25	Width across forks	b_5	mm	570
	4.32	Ground clearance centre of wheelbase	m_2	mm	25
	4.34.2	Aisle width (pallet 800x1200 length)	Ast	mm	2399
	4.35	Turning radius	W_a	mm	1925
Performance data	5.1	Travel speed laden/unladen		km/h	9.1 / 9.1
	5.2	Lift speed laden/unladen		m/s	0.2 / 0.39
	5.3	Lowering speed laden/unladen		m/s	0.47 / 0.47
	5.8	Max. gradeability laden/unladen		%	8 / 14
	5.10	Service brake			generatorisch
E-motor/Electronics	6.1	Drive motor, performance S2 60 min		kW	2.8
	6.2	Lift motor, performance with S3		kW	3
	6.3	Battery according to DIN 43531/35/36			nein
	6.4	Battery voltage/nominal capacity		V / Ah	24 / 465
	6.5	Battery weight		kg	380
	6.6.1	Energy consumption according to EN cycle		kWh/h	0.61

	6.6.2	CO2 equivalent as per EN 16796	kg/h	0.3
Other	8.1	Type of drive control		AC

- This data sheet according to VDI guideline 2198 only states the technical values of the standard truck. Different tyres, other masts, additional equipment etc. may result in different values.

The German production facilities in Norderstedt, Moosburg and Landsberg are certified.

ISO 9001
ISO 14001

Jungheinrich fork lift trucks meet European safety requirements.

CE

JUNGHEINRICH